EV On-Board Charger : Power Factor Correction

Mohamed Gueni

November 21, 2023

1 Block Diagram

The block diagram of the PFC design is shown in Figure 1. The PFC takes input from the Electric Vehicle Supply Equipment (EVSE) which later could be the mains plug (1ph) , 3 phase input or even a DC fast charging station. The PFC stage performs power factor correction and boosts the voltage to a specific high DC voltage before delivering DC power to the DC-link at the output.

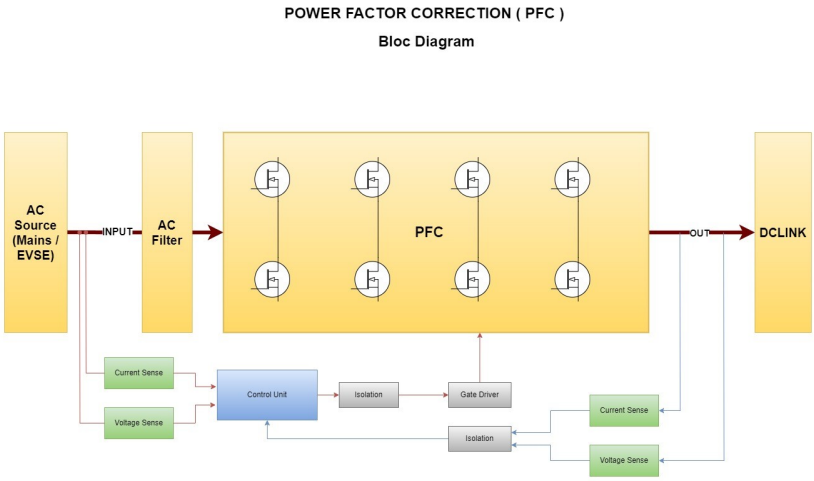

Figure 1: PFC Block Diagram

The DC Link at the output of the PFC would carry out the DC input power to the cascaded LLC bloc(s) which will be studied later on.

2 Block Description

In this document we will go through all sections of the power factor correction bloc starting with a brief description of the input power source which is an external part to this project and will only be included for simulation purposes.Then we will dive into the topology selected for this PFC stage and the switches technology and references which we'll start with. Note that later in the simulation phase we would conduct a couple of efficiency simulations between multiple switches from different suppliers in order to determine the one with the most efficiency and less switching and conduction losses in this design.

2.1 EVSE Input

The EVSE (Electric Vehicle Supply Equipment) provides the input power to the on-board charger. It supplies AC or DC power from the external power source.in this project we only interested in modeling the input source in simulation phases such as inside Plecs models.It should cover all three configurations for 3ph AC , 1ph AC and for DC input source for fast charging.

2.2 AC Filter

The first stage of the OBC is the EMI filter. During this stage AC power is filtered to remove any unwanted noise from the typical AC sine wave that is expected. At the input of our system , whether it is connected to home mains plug or to high power three phased charging station, the input can present some imperfections.Radiated EMI from other components can also be picked up on power cabling, adding to conducted levels. The system can experience at its input mainly two types of Electromagnetic interference (EMI) which are Differential Mode (DM) and Common Mode (CM) Noise.(Figure 2)

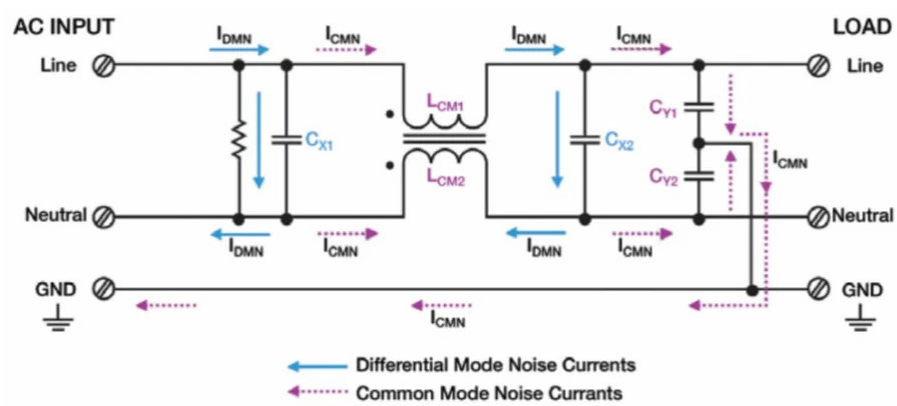

Figure 2: AC filter noise path.

DM noise is conducted on the line and neutral, in opposite directions. The

basic DM filter uses a single-winding inductor inserted into the line path, along with a capacitor from line to neutral, thus blocking noise from propagating through the system.

CM noise is noise conducted on both the line and neutral (ground) but in the same direction. The basic CM filter uses a dual-winding inductor in both line and neutral paths, plus a capacitor from line to ground.

As presented in Figure 3 , a typical but basic EMI filter uses the CX capacitors to attenuate differential mode noise, and an inductor-capacitor combination to reduce common mode noise. Designing an AC EMI (Electromagnetic Inter-

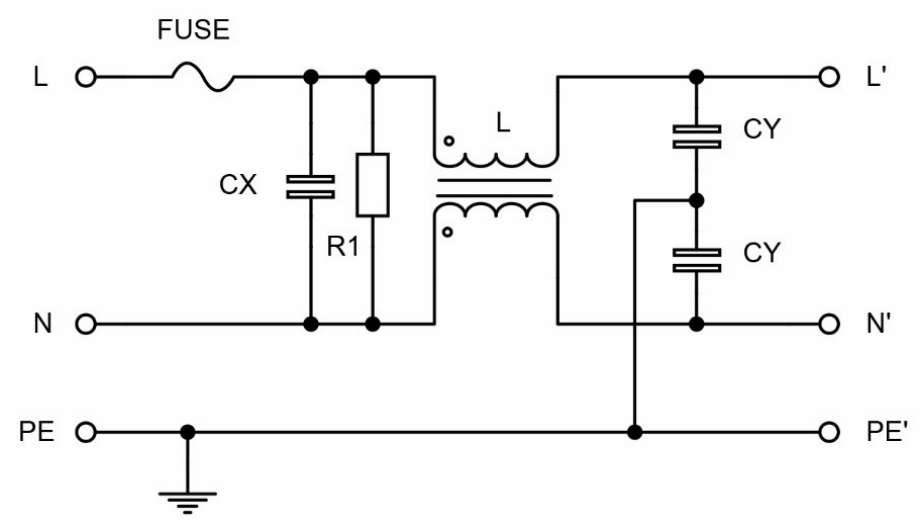

Figure 3: Typical single line AC EMI filter.

ference) filter for an onboard charger involves several stages to reduce conducted and radiated emissions.the EMI filter limits voltage and current spikes that can be harmful.Most commonly these filters are made up of X and Y Safety Capacitors, Common Mode Chokes and AC Harmonic Filter Capacitors.

2.2.1 Common Mode (CM) Filter:

Purpose: Attenuate common mode noise, which flows in the same direction on all three phases and the neutral. Components: Common mode choke Common mode capacitors Dimensioning: Inductance of the common mode choke: Choose based on the rated current and the frequency range of interest for common mode noise. Common mode capacitors: Capacitance should be selected to resonate with the common mode inductance at higher frequencies.

****Logic goes here !!****

2.2.2 Differential Mode (DM) Filter:

Purpose: Attenuate differential mode noise, which flows in opposite directions on different phases. Components: Differential mode choke Differential mode capacitors Dimensioning: Inductance of the differential mode choke: Choose based on the rated current and the frequency range of interest for differential mode noise. Differential mode capacitors: Capacitance should be selected to filter out high-frequency differential mode noise.

****Logic goes here !!**** A first glimpse into the general structure of the Filter could be clearly seen in the following figure.

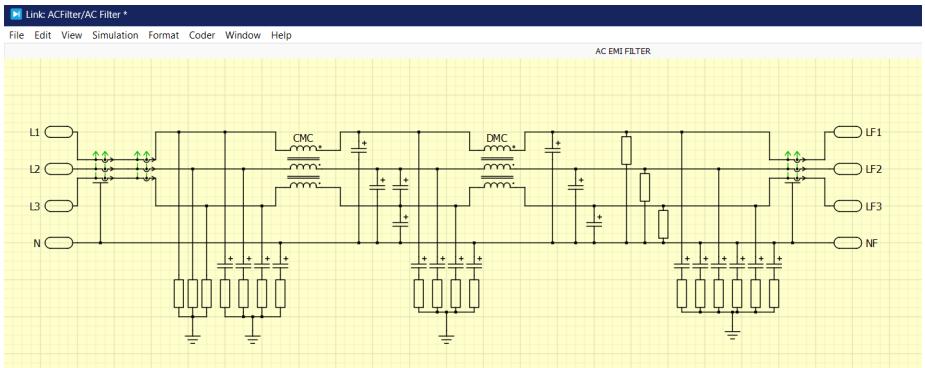

Figure 4: filter Plecs model.

2.2.3 Input Stage (Pre-filter):

The purpose is to suppress high-frequency conducted emissions. Stabilize the input voltage by mitigating voltage spikes and transients using mainly Input capacitors.

****Logic goes here !!****

2.2.4 Voltage Suppression:

Purpose: Protect the system against voltage spikes and transients. Components: Metal Oxide Varistors (MOVs) or Transient Voltage Suppressors (TVS) Dimensioning: Select based on the voltage rating and clamping voltage requirements.

****Logic goes here !!****

2.2.5 Grounding:

Purpose: Ensure proper grounding for the EMI filter and the entire system. Guidelines: Use a low-impedance ground connection. Minimize ground loops.